PRODUTTORI DI IMPIANTI AVICOLI
Productores de POULTRY EQUIPMENT
Equipos Avícolas MANUFACTURERS
PRODUCTEURS D'ÉQUIPEMENTS
Производители AVICOLES
оборудования для птицеводства
مصنعي معدات الدواجن 鸡禽饲养设备
PRODUTORES 가금류 장비 제조업체
DE INSTALAÇÕES AVÍCULAS KÜMES
養鶏設備メーカー HAYVANLARI
EKİPMANI ÜRETİCİLERİ
ผู้ผลิตอุปกรณ์สำหรับการผลิตสัตว์ปีก

VALLI®

MADE IN ITALY

LAYING

Volo - VITA 2.0

LAYING AVIARY - ALTERNATIVE SYSTEM



quality you can rely on

... COMFORTABLE LIFE

www.valli-italy.com

info@valli-italy.com

+39.0543.975311

YouTube

web

VALLI S.r.l.
Via Selva,14 - 47122 Forlì FC - ITALY

EN
VOLO Vita 2.0 - DE117007 - 20251006_S1

Volo - **VITA 2.0** 2 tiers

LAYING AVIARY - ALTERNATIVE SYSTEM

- Usable area 4,77 m² per linear meter
- Usable area with extended floor 5,18 m² per linear meter
- Available with 2 extra lines of feed trough on top of the 2nd tier - height 2440 mm (8' - 0 1/16")

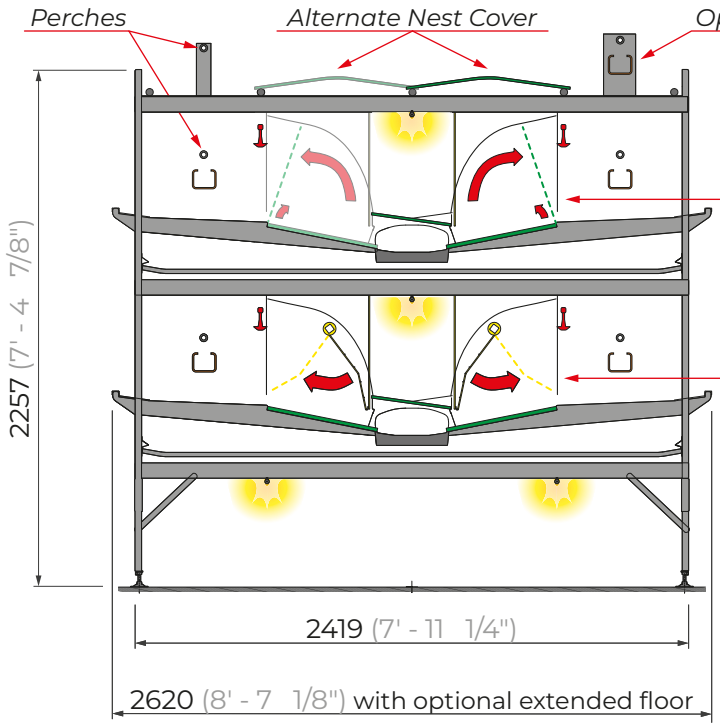

POSSIBLE NEST CONFIGURATION

1 *CLOSED NEST WITH ROCKING FUNCTION AND ANTI - SMOTHERING SYSTEM*

2 *CLOSED NEST WITH WIRE MESH EXPELLER*

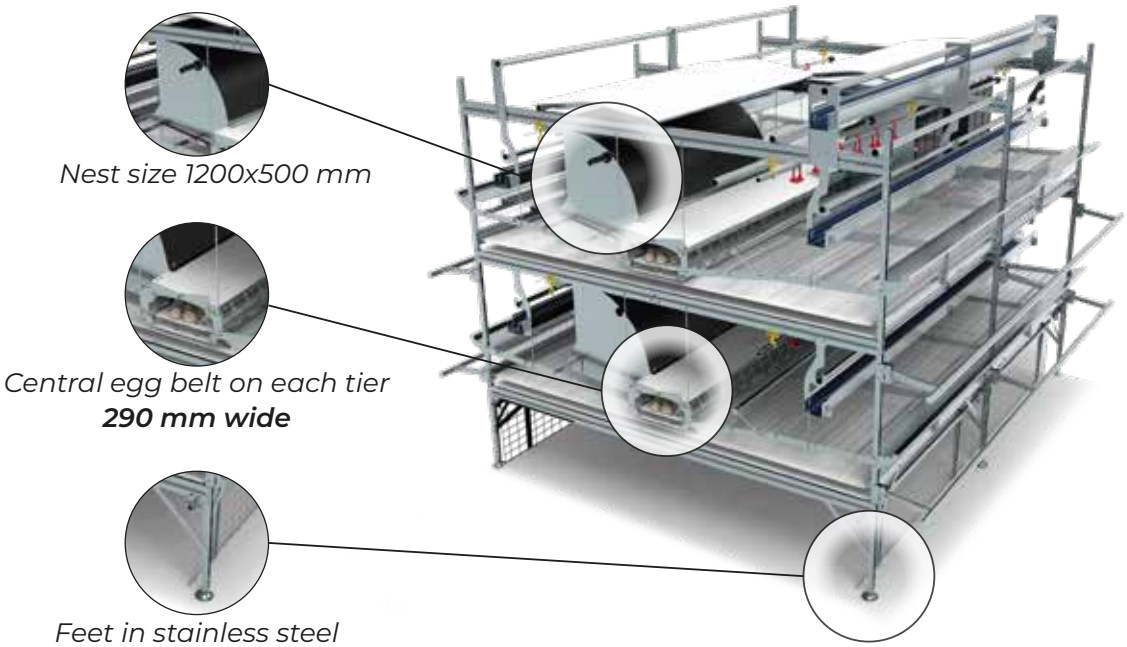

Nest size 1200x500 mm

Central egg belt on each tier
290 mm wide

Feet in stainless steel

Volo - **VITA 2.0** 3 tiers

LAYING AVIARY - ALTERNATIVE SYSTEM

- Usable area 6,77 m² per linear meter
- Usable area with extended floor 7,38 m² per linear meter
- Available with 2 extra lines of feed trough on top of the 3rd tier - height 3216 mm (10' - 6 5/8")

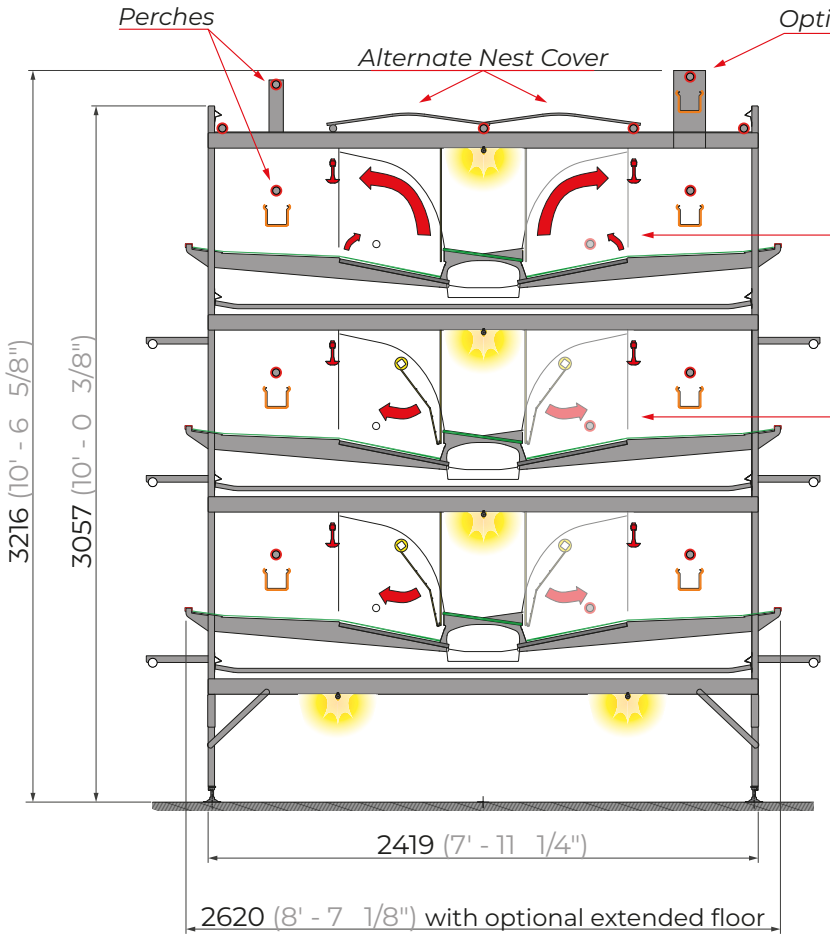

POSSIBLE NEST CONFIGURATION

1 *CLOSED NEST WITH ROCKING FUNCTION*
soft AstroTurf mat in plastic slats

2 *CLOSED NEST WITH EXPELLER*
soft AstroTurf mat in plastic slats



Nest size 1200x500 mm



Central egg belt on each tier
290 mm wide



Feet in stainless steel

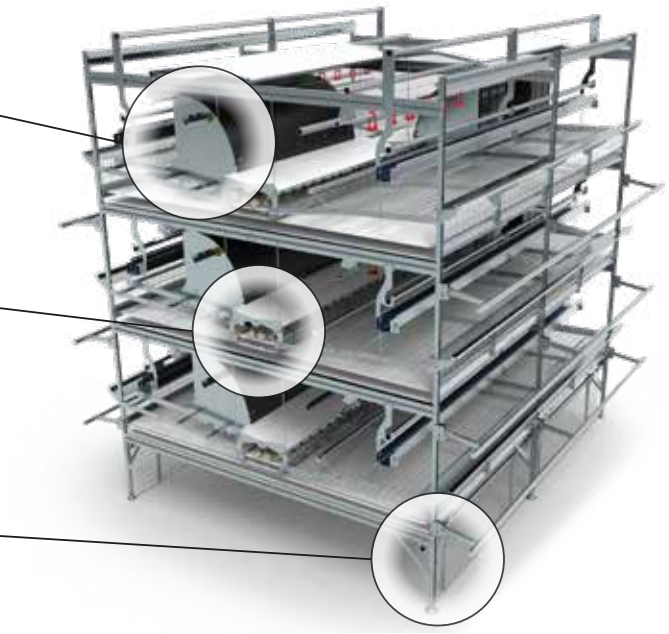

- Length of each module: 2900 mm (9' - 6 3 /16")
- The workforce has an excellent overview and easy inspection of the system thanks to the possibility to enter from both sides
- All tiers are equipped with laying nests, feed troughs and drinkers
- The nest are not continuous and the birds can move freely within the system
- Feet in stainless steel
- Available in multi-tier configuration with intermediate catwalks

VOLO VITA 2.0 is the innovative aviary system with staggered nests arranged alternately to optimize space and promote the animals' natural movement.

EXCELLENCE IN POULTRY EQUIPMENT

VALLI S.r.l.
Via Selva,14 - 47122 Forlì FC - ITALY
www.valli-italy.com info@valli-italy.com

Heights are subjects to decrease due to feet adjustment
Valli should reserve the right to freely change models and technical specifications at any time without prior notice