PRODUTTORI DI IMPIANTI AVICOLI
Productores de POULTRY EQUIPMENT
Equipos Avícolas MANUFACTURERS
PRODUCTEURS D'ÉQUIPEMENTS
Производители AVICOLES
оборудования для птицеводства
مصنعي معدات الدواجن 鸡禽饲养设备
PRODUTORES 가금류 장비 제조업체
DE INSTALAÇÕES AVÍCULAS KÜMES
養鶏設備メーカー HAYVANLARI
EKİPMANI ÜRETİCİLERİ
ผู้ผลิตอุปกรณ์สำหรับการผลิตสัตว์ปีก

VALLI®

MADE IN ITALY

LAYING

Volo - VLV

LAYING AVIARY - ALTERNATIVE SYSTEM



www.valli-italy.com

info@valli-italy.com

+39.0543.975311

YouTube

web

quality you can rely on

... LET THEM FREE

VALLI S.r.l.
Via Selva,14 - 47122 Forlì FC - ITALY

EN
VOLO VLV - DE116999- 20261027 - S2

Volo - **VLV** timeless standard

LAYING AVIARY - ALTERNATIVE SYSTEM

Usable Area:

4.83 m² per linear meter

6.03 m² per linear meter with additional platform

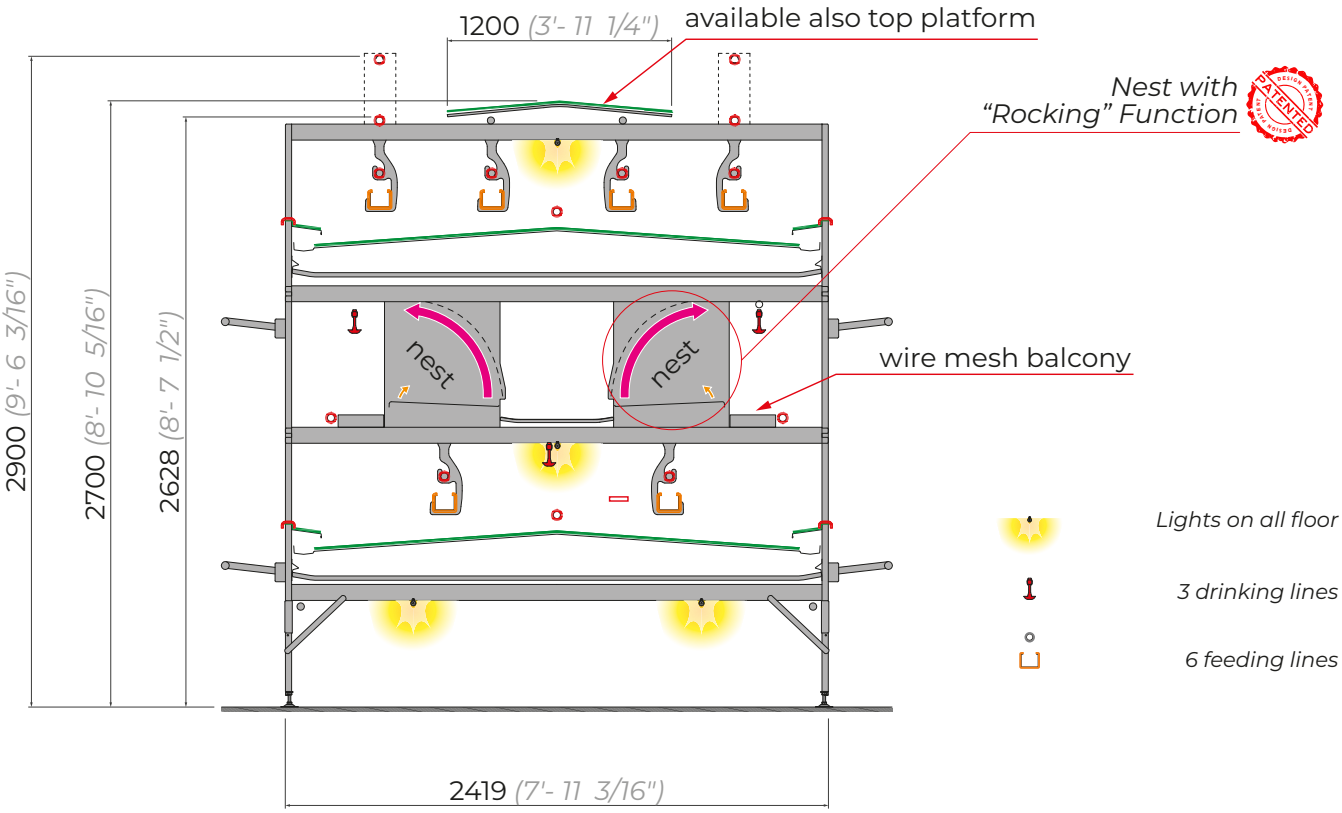

- 2 nests on the second floor (width 0.50 m or 0.60 m)
- 1 common egg belt in the center (width 0.50 m)
- Length of each module: 2900 mm (9' - 6 3/16")
- Optimum ratio between usable area, feeding space and perches
- Drinking lines in front of the nests and on the 1st tier
- Manure belts on the 1st and 3rd tier, laying nests and "balcony" on the 2nd tier
- Optional additional upper platform (1,2m long, running the full length of the unit, usable as a working surface)
- The "balcony" can be easily removed for cleaning, inspection and maintenance
- Automatic expeller of the hens from the nest with rocking function
- Balconies available in wiremesh close to the nest
- Disassembling of the laying nest without any tool for an easy and fast inspection/cleaning behind it
- Feet in stainless steel
- Available with or without "pvc" duct for manure drying
- Available also in double decker configuration with intermediate catwalks
- Egg Belt cover available on request



Volo - **VLV E** the central nest option

LAYING AVIARY - ALTERNATIVE SYSTEM

Usable Area:

5.68 m² per linear meter

6.88 m² per linear meter with additional platform

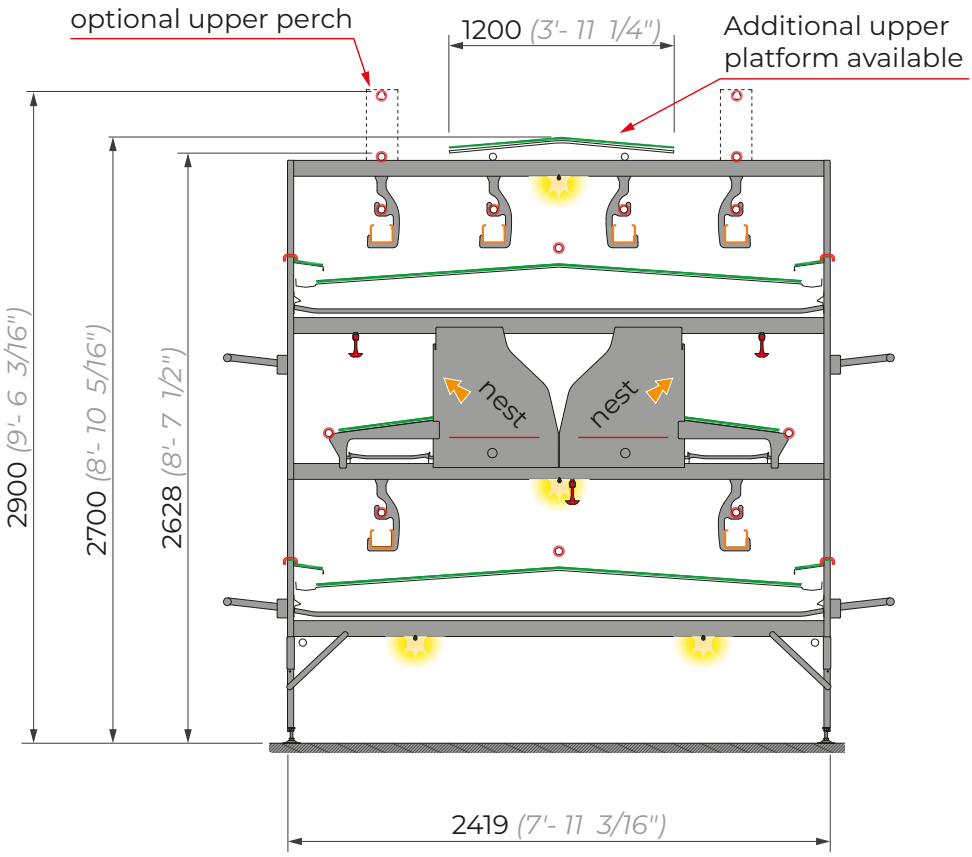

Additional features compared to standard VLV

- 2 central nests on the second tier (width: 0.55 m)
- 2 egg belts (width 0.35m)
- Egg belt covers can be used as usable surface
- Automatic animal expulsion from nests with lifting floor
- One drinking line in front of each nest and one on the 1st tier



Heights are subjects to decrease due to feet adjustment
Valli should reserve the right to freely change models and technical specifications at any time without prior notice

Volo - **VLV XL** maximum width

LAYING AVIARY - ALTERNATIVE SYSTEM

Usable area:

6.04 m² per linear meter

7.24 m² per linear meter with additional platform

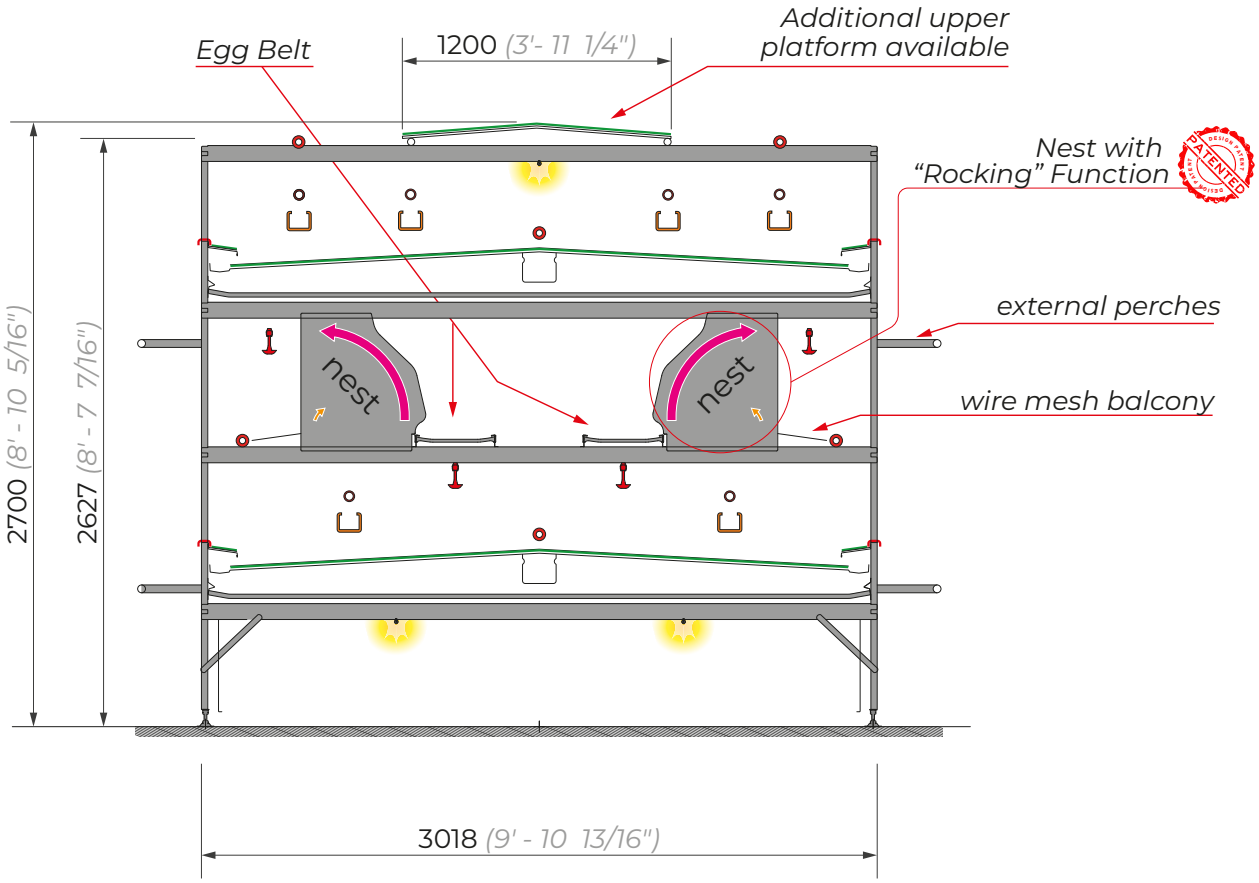

Additional features compared to standard VLV

- 2 nest on second floor (width 0.50m or 0.60 m)
- 2 internal egg belt (width 0.35m)
- Length of each module: 2900 mm (9' - 6 3/16")
- Optional additional upper platform (1 m long, running the full length of the unit, usable as a working surface)



VOLO VLV provides an excellent balance between usable area, feeding space, and sturdy perches, featuring two drinking lines positioned in front of the nests and on the first level